A peer-reviewed version of this preprint was published in PeerJ on 17 October 2017.

View the peer-reviewed version (peerj.com/articles/3950), which is the preferred citable publication unless you specifically need to cite this preprint.

Yang W, Li X, Qi S, Li X, Zhou K, Qing S, Zhang Y, Gao M. 2017. lncRNA H19 is involved in TGF-β1-induced epithelial to mesenchymal transition in bovine epithelial cells through PI3K/AKT Signaling Pathway. PeerJ 5:e3950 https://doi.org/10.7717/peerj.3950

lncRNA H19 mediates TGF-β1-induced epithelial to mesenchymal transition in bovine epithelial cells through PI3K/AKT Signaling Pathway

Increased levels of long noncoding RNA H19 (H19) have been observed in many inflammatory and organ fibrosis diseases including ulcerative colitis, osteoarthritis, liver fibrosis, renal fibrosis and pulmonary fibrosis. However, the role of H19 in bovine mastitis and mastitis-caused fibrosis is still unclear. In our study, H19 was characterized as a novel regulator of EMT induced by transforming growth factor-β1 (TGF-β1) in bovine mammary alveolar cell-T (MAC-T) cell line. We found that H19 was highly expressed in bovine mastitis tissues and inflammatory MAC-T cells induced by virulence factors of pathogens. TGF-β1 was also highly expressed in inflammatory MAC-T cells, and exogenous TGF-β1 could induce EMT, enhance extracellular matrix protein expression, and upregulate H19 expression in epithelial cells. Stable expression of H19 significantly promotes EMT progression and expression of ECM protein induced by TGF-β1 in MAC-T cells. Furthermore, by using a specific inhibitor of the PI3K/AKT pathway, we demonstrated that TGF-β1 upregulated H19 expression through PI3K/AKT pathway. All these observations imply that the lncRNA H19 modulated TGF-β1-induced epithelial to mesenchymal transition in bovine epithelial cells through PI3K/AKT signaling pathway, which suggests that mammary epithelial cells might be one source for myofibroblasts in vivo in the mammary glands under an inflammatory condition, thereby contributing to mammary gland fibrosis.

PeerJ Preprints | https://doi.org/10.7287/peerj.preprints.3089v1 | CC BY 4.0 Open Access | rec: 17 Jul 2017, publ: 17 Jul 2017

lncRNA H19 mediates TGF-β1-induced epithelial to mesenchymal transition in bovine epithelial cells through PI3K/AKT Signaling Pathway

Wei Yang[1], Xuezhong Li[1], ShaopeiQi[1], Xueru Li[1], Kun Zhou[3], SuzhuQing[1], Yong Zhang[1,2]* and Ming-Qing Gao[1,2]*

[1]College of Veterinary Medicine, Northwest A&F University, Yangling 712100, Shaanxi, China
[2]Key Laboratory of Animal Biotechnology, Ministry of Agriculture, Northwest A&F University, Yangling 712100, Shaanxi, China
[3]Innovation Experimental College, Northwest A&F University, Yangling 712100, Shaanxi, China.

*Correspondence: zhangyong1956@nwsuaf.edu.cn; gaomingqing@nwsuaf.edu.cn

PeerJ Preprints | https://doi.org/10.7287/peerj.preprints.3089v1 | CC BY 4.0 Open Access | rec: 17 Jul 2017, publ: 17 Jul 2017

ABSTRACT

Increased levels of long noncoding RNA H19 (H19) have been observed in many inflammatory and organ fibrosis diseases including ulcerative colitis, osteoarthritis, liver fibrosis, renal fibrosis and pulmonary fibrosis. However, the role of H19 in bovine mastitis and mastitis-caused fibrosis is still unclear. In our study, H19 was characterized as a novel regulator of EMT induced by transforming growth factor-β1 (TGF-β1) in bovine mammary alveolar cell-T (MAC-T) cell line. We found that H19 was highly expressed in bovine mastitis tissues and inflammatory MAC-T cells induced by virulence factors of pathogens. TGF-β1 was also highly expressed in inflammatory MAC-T cells, and exogenous TGF-β1 could induce EMT, enhance extracellular matrix protein expression, and upregulate H19 expression in epithelial cells. Stable expression of H19 significantly promotes EMT progression and expression of ECM protein induced by TGF-β1 in MAC-T cells. Furthermore, by using a specific inhibitor of the PI3K/AKT pathway, we demonstrated that TGF-β1 upregulated H19 expression through PI3K/AKT pathway. All these observations imply that the lncRNA H19 modulated TGF-β1-induced epithelial to mesenchymal transition in bovine epithelial cells through PI3K/AKT signaling pathway, which suggests that mammary epithelial cells might be one source for myofibroblasts in vivo in the mammary glands under an inflammatory condition, thereby contributing to mammary gland fibrosis.

Keywords: Mastitis, Epithelial cells, MAC-T, H19, TGF-β1, Bovine

INTRODUCTION

Bovine mastitis is an ordinary disease of dairy herds caused by changes in metabolism, physiological trauma or contagious or environmental pathogenic microorganisms(Oviedo-Boyso et al. 2007). Mammary tissue was damaged by products from bacterial pathogen and enzymes released from stroma cells and secretory cells in the immune response process if infection persists(Zhao & Lacasse 2008). The repair process in the damaged mammary tissue is usually accomplished by fibrosis, which can start during an inflammatory response(Benites et al. 2002). Both mastitis and mastitis-caused fibrosis affect dairy industry due to the reduction of milk production and increased costs of treatments.

Epithelial mesenchymal transition (EMT) is a process that epithelial cells gradually acquire certain characteristics of the mesenchymal cells to produce fibroblasts and myofibroblasts(He et al. 2017). It is characterized by the morphological change of epithelial cells from cobblestone-shape to spindle-shape and expression changes of some EMT markers, such as E-cadherin decrease and the elevation of vimentin and α-SMA(Thiery 2002). Accumulating research evidenced that EMT plays a role in the genesis of fibroblasts during organ fibrosis(Becker-Carus 1972). What's more, Transforming Growth Factor-β1 (TGF-β1) can induce EMT during organ fibrosis, and it is regarded as a master regulator of EMT progression (Moustakas & Heldin 2016; Risolino et al. 2014).

The long non-coding RNA (lncRNA) H19 gene is an imprinted maternally expressed gene located on chromosome 29 in bovine, and it plays a vital role on mammalian development (Keniry et al. 2012). Increasing evidence showed that H19 may have either oncogenic or tumor suppressor properties based on its opposite expression changes in various cancers

PeerJ Preprints | https://doi.org/10.7287/peerj.preprints.3089v1 | CC BY 4.0 Open Access | rec: 17 Jul 2017, publ: 17 Jul 2017

92 including bladder cancer(Luo et al. 2013) and Gastric (Song et al. 2013; Yang et al. 2012),
93 and the exact mechanism is still elusive(Jiang et al. 2016). Otherwise, H19 RNA was related
94 to the development of inflammatory diseases, such as ulcerative colitis(Chen et al. 2016)
95 and osteoarthritis(Steck et al. 2012) and organ fibrosis including liver fibrosis(Song et al.
96 2017), renal fibrosis(Xie et al. 2016) and pulmonary fibrosis (Tang et al. 2016). A recent
97 research linked H19 upregulation to the TGFβ-induced EMT process(Matouk et al. 2013).
98 In this study, we compared the expression of H19 in inflammatory tissue and mammary
99 epithelial cells to their normal counterparts. Using immortalized mammary epithelial cells line
100 of MAC-T cells, we then investigated the roles of H19 in the TGF-β1-induced EMT in
101 MAC-T cells, suggesting that H19 mediate the mastitis-caused mammary fibrosis. And this
102 finding will lead to a better understanding of the pathological mechanism of bovine mammary
103 gland fibrosis caused by mastitis.
104

105 **MATERIALS AND METHODS**

106 Cell culture and treatment

107 The mammary alveolar cell-T (MAC-T) cell line was a gift from Prof. Mark D. Hanigan
108 (Virginia Polytechnic Institute and State University, Blacksburg, VA). MAC-T cells were
109 cultured in complete DMEM/F12 medium (GIBCO BRL, Life Technologies, Burlington, ON)
110 supplemented with 10% fetal bovine serum (FBS), 100 IU/ml penicillin, and 100 μg/ml
111 streptomycin (Gibco BRL) at 37 °C in an incubator with 5% CO_2. Confluence cells were
112 subcultured by digestion with 0.15% trypsin and 0.02% EDTA.
113 For cell treatments with reagents, cells grown to around 80% confluence in culture

PeerJ Preprints | https://doi.org/10.7287/peerj.preprints.3089v1 | CC BY 4.0 Open Access | rec: 17 Jul 2017, publ: 17 Jul 2017

114 dishes were respectively treated by LPS (Sigma-Aldrich, St. Louis, MO) at 10 ng/μl for 3 h,
115 LTA (Inviogen, San Diego, CA) at 20 ng/μl for 12 h, or TGF-β1 (Creative BioMart, Shirley,
116 NY) at 10 ng/ml for 36 h according to recommended concentrations of our previous
117 publication(Zhang et al. 2016).
118
119 RNA extraction and real-time PCR
120 Total mRNA was extracted from mammary tissue and cells by using TriZol solution
121 (TransGene, Shanghai, China) and the RNA Easy Kit (TransGene) according to the
122 manufacturer's instructions. Total RNA concentration was measured by the spectrophotometer
123 (ND 2.0; Nano Drop Technologies, Wilmington, DE), and 3μg of total mRNA was
124 reverse-transcribed into cDNA using TransScript II First-Stran cDNA Synthesis SuperMix
125 (TransGene). Quantitative primers were designed based on the sequences in the National
126 Center of Biotechnology Information Database and synthesized by Sangon Biotech (Shanghai,
127 China). The primers were provide in Additional file 1. Quantitative real time was performed
128 with an iQ5 light cycler (Bio-Rad, Hemel Hempstead, UK) in 20 μl reactions. GAPDH was
129 used as the reference gene.
130
131 Western blotting
132 Cells were lysed in PRO-PREP Protein Extraction Solution (iNtRON Biotechnology, Inc,
133 Gyeonggi-do, Korea) to prepare protein lysates according to manufacturer's instructions. Cell
134 lysates were centrifuged at 12000 rpm for 10 min at 4°C. Protein concentration was measured
135 using Bradford Easy Protein Quantitative Kit (TransGene). Equal protein extraction was

PeerJ Preprints | https://doi.org/10.7287/peerj.preprints.3089v1 | CC BY 4.0 Open Access | rec: 17 Jul 2017, publ: 17 Jul 2017

136 separated in 10% polyacrylamide gels (Sigma-Aldrich).After that, proteins were transferred to
137 the PVDF membranes. Then the membranes were blocked with 10% non-fat milk and
138 incubated with anti-α-SMA (Abcam, Cambridge, UK), anti-collagen I (Abcam),
139 anti-E-cadherin (Abcam), anti-N-cadherin (Bioss, Beijing, China), albumin (Bioss), MMP9
140 (Bioss) and anti-GAPDH (TransGene) antibodies at 4 °C overnight. After washing
141 membranes with TBST for three times for 5 min each time, membranes were incubated with
142 secondary antibodies. Finally, immunoreactive proteins were detected using an enhanced
143 chemiluminescence detection kit (Beyotime, shanghai, china).
144
145 ELISA
146 MAC-T cells were cultured for 24 h in fresh serum-free medium after treatment with
147 LPS or LTA. Then, the collected medium was centrifuged at 12000 rpm for 5min to remove
148 cell debris. TNF-α secreted from MAC-T in the medium was detected according to the
149 manufacturer's instructions of ELISA kits (Huzhen Biological Technology Co, LTD, Shanghai,
150 China).
151
152 Establishment of stable MAC-T cell clone with overexpressed H19
153 The full length H19 gene sequence from NCBI was synthesized by Sangon Biotech,
154 which includes BamHI and NotI enzyme restriction sites. The product synthesized was
155 digested with the BamHI and NotI enzymes and ligated into the BamHI and NotI sites of the
156 CD513B-1 basic vector(System Biosciences, Mountain View, CA, USA), yielding the
157 CD513B-1-H19 construct. One day before transfection, *MAC-T* cells were seeded into 60-mm

PeerJ Preprints | https://doi.org/10.7287/peerj.preprints.3089v1 | CC BY 4.0 Open Access | rec: 17 Jul 2017, publ: 17 Jul 2017

158 culture dishes at about 80% confluence. Cells were transfected with CD513B-1-H19 *or*
159 CD513B-1 control plasmids using electroporation with transfer buffer in a 4 mm gap cuvette
160 at 510 V for one pulse. After 8 h of transfection, cells were subcultured to 50% confluence in
161 medium containing 0.6 μg/ml puromycin (Sigma-Aldrich, St. Louis, MO, USA). When all
162 MAC-T cells in the nontransfected control culture were killed, puromycin-resistant clones
163 were picked and passaged in medium containing half the concentration of puromycin. H19
164 targeted cell clones were screened by real time PCR and flag fluorescence.
165
166 Luciferase reporter assays
167 Series of upstream fragments of H19 gene sequence were amplified by PCR from
168 genomic DNA using primers containing enzyme restriction sites, and the primers were listed
169 in Additional file 1. These fragments of H19 gene sequence were respectively cloned into the
170 PGL4.10 plasmids (promega, Madison, WI, USA). MAC-T cells were transfected with a
171 mixture of pRL-TK-renilla-luciferase plasmid and PGL4.10-reporter plasmids. The PGL4.10
172 plasmid was used as control vector. After transfection for 8 h, MAC-T cells transfected with
173 PGL4.10-reporter plasmids and control vectors were treated with TGF-β1 as aforementioned.
174 Finally, the luciferase activities were detected by Dual-Luciferase Reporter analytical
175 instrument (promega).
176
177 Statistical analysis
178 The results are expressed as means ± standard deviation (SD). All data from at least three
179 independent for each parameter were analyzed with ANOVA (SPSS11.5 software). A p-value

PeerJ Preprints | https://doi.org/10.7287/peerj.preprints.3089v1 | CC BY 4.0 Open Access | rec: 17 Jul 2017, publ: 17 Jul 2017

180 of < 0.05 was considered statistically significant.

181

182 **RESULTS**

183 **Expression of H19 in mammary tissue and epithelial cells of bovine**

184 To investigate if H19 mediates the process of bovine mastitis, we first explored the
185 expression of H19 in normal and inflammatory mammary tissue of bovine. Results from
186 qPCR analysis showed that H19 was significantly up-regulated in inflammatory mammary
187 tissue compare with normal tissue (Figure.1). Subsequently, we further detected the H19
188 expression in inflammatory MAC-T cells in an epithelial cell model of mastitis by treating
189 MAC-T cells with LPS or LTA according to the recommended concentration of previous
190 publication(Zhang et al. 2016). Both LPS and LTA could induce an obvious inflammatory
191 response in MAC-T cells as indicated by elevated TNF-α mRNA expression (Figure.2A) and
192 protein secretion (Figure. 2B). Consistent with the expression of H19 in tissue level, we found
193 that the H19 expression was also up-regulated in inflammatory epithelial cells induced by
194 LPS and LTA in vitro (Figure. 2C).

195

196 **TGF-β1 was highly expressed in inflammatory epithelial cells and induced EMT and**
197 **enhanced ECM protein expression**

198 TGF-β1 has been shown to play an essential role in the suppression of inflammation,
199 yet recent studies have revealed the positive roles of TGF-β1 in inflammatory
200 response(Yoshimura et al. 2010). Here we found that TGF-β1 had an increased expression in
201 both LPS- and LTA-induced inflammatory MAC-T cells (Figure.3A). TGF-β1 could induce
202 EMT phenotypes in epithelial cells in vitro and has been associated with EMT in vivo

PeerJ Preprints | https://doi.org/10.7287/peerj.preprints.3089v1 | CC BY 4.0 Open Access | rec: 17 Jul 2017, publ: 17 Jul 2017

203 (Moustakas & Heldin 2016; Risolino et al. 2014). To investigate whether if increased TGF-β1
204 in epithelial cells under inflammatory condition caused mammary fibrosis via EMT, we
205 incubated MAC-T cells with exogenous TGF-β1 to examine the occurrence of EMT. The
206 western blot results showed that the expressions of α-SMA and N-cadherin, two well-known
207 EMT markers, were significantly upregulated in TGF-β1-treated MAC-T cells compared to
208 untreated cells, while E-cadherin expression was down-regulated in MAC-T cells after
209 treatment with TGF-β1 compared to untreated cells (Figure.3B), suggesting TGF-β1 could
210 induce EMT in epithelial cells of MAC-T. In addition, TGF-β1 treatment enhanced the protein
211 expression levels of several extracellular matrix (ECM) proteins, including albumin, collagen
212 1, and MMP9, in MAC-T cells (Figure.3B). Interestingly, we found that TGF-β1 treatment
213 was able to up-regulate H19 expression in MAC-T cells (Figure.3C).

214 **H19 mediated TGF-β1-induced EMT and ECM protein expression in MAC-T cells**

215 To investigate whether if H19 mediated TGF-β1-induced EMT in MAC-T cells, we
216 established H19 stably overexpressed MAC-T cell clones by introducing of the lentiviral
217 vector of CD513B-1 containing the H19 cDNA (Figure.4A). High-level GFP-expression was
218 detected by direct viewing with a fluorescent microscope in MAC-T cells transfected by both
219 CD513B-1 and CD513B-1-H19 vectors after selection with puromycin (Figure.4B). The
220 overexpression of H19 in MAC-T cells was further confirmed by RT-qPCR (Figure. 4C).
221 Western blot results showed that overexpression of H19 significantly promoted
222 TGF-β1-induced EMT in MAC-T cells compared to CD513B-1 control vector-transfected
223 cells, as indicated by increased α-SMA and N-cadherin expression and decrease E-cadherin
224 expression (Figure. 4D). In addition, overexpression of H19 also promoted TGF-β1-induced

PeerJ Preprints | https://doi.org/10.7287/peerj.preprints.3089v1 | CC BY 4.0 Open Access | rec: 17 Jul 2017, publ: 17 Jul 2017

225 expression increase of Albumin, Collagen 1, and MMP9 (Figure. 4D).

226

227 **TGF-β1-stimulated H19 requires the AKT activation**

228 A previously publication linked H19 expression to PI3K/AKT pathway in response to
229 TGF-β1 treatment(Matouk et al. 2014). Here, we found that TGF-β1 treatment could activate
230 AKT protein in MAC-T cells, and this activation was effectively inhibited by LY 294002, a
231 specific chemical inhibitor of the PI3K/AKT pathway (Figure. 5A). Furthermore, the
232 inhibition of activation of PI3K/AKT pathway by LY294002 was able to abolished
233 TGF-β1-induced up-regulation of H19 in MAC-T cells (Figure. 5B). These data suggest that
234 TGF-β1-induced EMT in MAC-T cells is mediated by the TGF-β1/AKT/H19 axis.

235

236 **Identification of H19 promoter region**

237 To identify the promoter region of H19 gene responded to TGF-β1 treatment, luciferase
238 reporter plasmids were constructed by inserting each truncation of a 4679 bp upstream
239 segment of H19. All constructs were confirmed by DNA sequencing. The luciferase activities
240 were tested by luciferase assay in MAC-T cell line. We did not find the H19 promoter region
241 within the upstream 4976bp sequences of H19responsible for TGF-β1-induced EMT in
242 MAC-T cells. As showed in Figure. 6, transcriptional activity was not different among all
243 examined segments.

244

245 **DISCUSSION**

246 It has been reported that H19 upregulation is linked to the process of EMT in

PeerJ Preprints | https://doi.org/10.7287/peerj.preprints.3089v1 | CC BY 4.0 Open Access | rec: 17 Jul 2017, publ: 17 Jul 2017

247 carcinogenesis and embryogenesis, and induction of EMT by different approaches (e.g.
248 hypoxia, TGFβ) in cancer cells is accompanied by H19 upregulation(Oviedo-Boyso et al.
249 2007). EMT has been taken as the potential sources of myofibroblasts in tissue fibrosis(Zou et
250 al. 2017), and bovine mastitic usually can cause varying degrees of fibrosis process of
251 mammary glands. We speculated that H19 upregulation might be involved in the mammary
252 fibrosis induced by mastitic.

253 Here we found that exposure of MAC-T cells to TGF-β1 stimulation could cause them
254 undergo EMT mediated by H19 upregulation, representing another source of fibroblasts
255 involved in mammary gland fibrosis of bovine.

256 We first observed that the expression level of H19 was upregulated in both mastitic
257 mammary tissue compared to normal tissue, indicating that H19 was involved in the immune
258 response of mammary glands during the process of bovine mastitic. During bacterial invasion,
259 mammary epithelial cells play an important role in inducing a relevant innate immune
260 response in mammary glands by immunological factor release(Zhang et al. 2016). H19
261 upregulation was also observed in inflammatory MAC-T cells induced by the gramnegative
262 and gram-positive bacterial cell wall components LPS and LTA, suggesting H19 is involved
263 in the immune response process of epithelial cells triggered by pathogens.

264 Following inflammation, some types of cells produce TGF-β1, and excessive TGF-β1
265 contributes to a pathologic excess of tissue fibrosis(Branton & Kopp 1999). EMT is
266 recognized as playing an important role in repair and scar formation following epithelial
267 injury. The evidence that TGF-β1 induces EMT in alveolar epithelial cells in vitro and in vivo
268 suggests that alveolar epithelial cells may serve as a source of myofibroblasts in lung

PeerJ Preprints | https://doi.org/10.7287/peerj.preprints.3089v1 | CC BY 4.0 Open Access | rec: 17 Jul 2017, publ: 17 Jul 2017

269 fibrosis(Willis & Borok 2007). In this study, we found TGF-β1 had an upregulated expression
270 in MAC-T cells under LPS or LTA stimulation. To investigate whether the excessive TGF-β1
271 has an effect on MAC-T cells through an autocrine manner, thus leads to an EMT process, we
272 treated MAC-T cells with exogenous TGF-β1. TGFβ1-induced protein expression changes of
273 several well-known EMT makers, such as downregulation of E-cadherin and upregulation of
274 α-SMA and N-cadherin, were observed in MAC-T cells, indicating TGFβ1-induced EMT
275 occurred. Myofibroblasts release a variety of excessive extracellular matrix proteins
276 contributing to organ fibrosis(Hinz et al. 2007). We found that TGFβ1 stimulates increased
277 expression of extracellular matrix proteins including Collagen type 1, MMP9, and albumin in
278 MAC-T cells.

279 An interesting finding is that TGFβ1 stimulates the expression of H19 in MAC-T cells.
280 We next established an epithelial cell line with stable overexpressed H19 level to assess the
281 relation between H19 and TGF-β1-induced EMT in MAC-T cells. We found that H19
282 overexpression could enhance the TGF-β1-induced EMT in MAC-T cells, indicating a high
283 level of H19 expression was associated with EMT, which is consistent with the previous
284 observation that TGF-β1 is associated with EMT and inflammation (Franco et al. 2010; Gal et
285 al. 2008; Salgado et al. 2017).

286 Accumulating studies have evidenced that AKT was an important regulator of EMT in
287 the majority of cell types (Larue & Bellacosa 2005; Lee & Han 2010; Maseki et al. 2012). In
288 our study, we found TGFβ1 activated PI3K/AKT signal pathway in MAC-T cells, and the
289 specific inhibitor of the PI3K/AKT pathway was able to inhibit the activation of AKT. What's
290 more, this inhibitor also abated TGF-β1-induced upregulation of H19 in MAC-T cells,

PeerJ Preprints | https://doi.org/10.7287/peerj.preprints.3089v1 | CC BY 4.0 Open Access | rec: 17 Jul 2017, publ: 17 Jul 2017

291 suggesting that H19 expression increase in MAC-T cells was induced by TGF-β1 through
292 PI3K/AKT pathway. This finding is consistent with the results from a previously publication
293 that linked H19 expression to PI3K/AKT pathway in response to TGF-β1 treatment(Matouk
294 et al. 2014). Finally, we tried to identify the promoter region responsive to TGF-β1 treatment
295 by using luciferase reporter assay to detect the upstream 4.679kb sequence of H19 gene, but
296 no promoter responsive to TGF-β1 was found within the examined sequence regions. Further
297 researches should be done in the future to demonstrate the mechanism in which TGF-β1
298 regulate the expression of H19 in MAC-T cells.

299 **CONCLUSIONS**

300 In summary, we show evidence that H19 had increased expressions in both bovine
301 mastitic tissue and inflammatory bovine epithelial cells, and lncRNA H19 mediates
302 TGF-β1-induced EMT and ECM protein synthesis in bovine epithelial cells through
303 PI3K/AKT Signaling Pathway. Additional studies are clearly needed to both demonstrate the
304 molecular mechanism of H19 responsive to TGF-β1 and address whether EMT occurs in vivo
305 during bovine mastitis. Based on our results we suggest that mammary epithelial cells might
306 be one source for myofibroblastsin vivo in the mammary glands under an inflammatory
307 condition, thereby contributing to mammary gland fibrosis.

308 **ACKNOWLEDGEMENTS**

309 We thank Prof. Mark D. Hanigan (Virginia Polytechnic Institute and State University,
310 Blacksburg, VA) for his gift of the mammary alveolar cell-T (MAC-T) cell line.

311 **ADDITIONAL INFORMATION AND DECLARATIONS**

312 **Funding**

PeerJ Preprints | https://doi.org/10.7287/peerj.preprints.3089v1 | CC BY 4.0 Open Access | rec: 17 Jul 2017, publ: 17 Jul 2017

The study was supported by grants from National Natural Science Foundation of China (No. 31402165).

Competing Interests

No competing interests declared

Author Contributions

All authors contributed significantly to this research and preparation of the manuscript. Y.Z. and G.MQ conceived and designed the experiments. W.Y. L.XZ Q.SP L.XU K.Z and Q.SZ performed the experiments and analyzed the data. W.Y. and G.MQ wrote the manuscript. All authors have been involved in the drafting, critical revision and final approval of the manuscript for publication.

PeerJ Preprints | https://doi.org/10.7287/peerj.preprints.3089v1 | CC BY 4.0 Open Access | rec: 17 Jul 2017, publ: 17 Jul 2017

345
346
347 **REFERENCES**

348 Becker-Carus C. 1972. [Effects of magnesium orotates and orotic acid on the learning process in rats].
349 *Arzneimittelforschung* 22:2067-2069.
350 Benites NR, Guerra JL, Melville PA, and da Costa EO. 2002. Aetiology and histopathology of bovine mastitis of
351 espontaneous occurrence. *J Vet Med B Infect Dis Vet Public Health* 49:366-370.
352 Branton MH, and Kopp JB. 1999. TGF-beta and fibrosis. *Microbes Infect* 1:1349-1365.
353 Chen SW, Wang PY, Liu YC, Sun L, Zhu J, Zuo S, Ma J, Li TY, Zhang JL, Chen GW, Wang X, Zhu QR, Zheng YW, Chen
354 ZY, Yao ZH, and Pan YS. 2016. Effect of Long Noncoding RNA H19 Overexpression on Intestinal Barrier
355 Function and Its Potential Role in the Pathogenesis of Ulcerative Colitis. *Inflamm Bowel Dis*
356 22:2582-2592.
357 Franco DL, Mainez J, Vega S, Sancho P, Murillo MM, de Frutos CA, Del Castillo G, Lopez-Blau C, Fabregat I, and
358 Nieto MA. 2010. Snail1 suppresses TGF-beta-induced apoptosis and is sufficient to trigger EMT in
359 hepatocytes. *J Cell Sci* 123:3467-3477.
360 Gal A, Sjoblom T, Fedorova L, Imreh S, Beug H, and Moustakas A. 2008. Sustained TGF beta exposure suppresses
361 Smad and non-Smad signalling in mammary epithelial cells, leading to EMT and inhibition of growth
362 arrest and apoptosis. *Oncogene* 27:1218-1230.
363 He G, Ma M, Yang W, Wang H, Zhang Y, and Gao MQ. 2017. SDF-1 in Mammary Fibroblasts of Bovine with
364 Mastitis Induces EMT and Inflammatory Response of Epithelial Cells. *Int J Biol Sci* 13:604-614.
365 Hinz B, Phan SH, Thannickal VJ, Galli A, Bochaton-Piallat ML, and Gabbiani G. 2007. The myofibroblast: one
366 function, multiple origins. *Am J Pathol* 170:1807-1816.
367 Jiang X, Yan Y, Hu M, Chen X, Wang Y, Dai Y, Wu D, Wang Y, Zhuang Z, and Xia H. 2016. Increased level of H19
368 long noncoding RNA promotes invasion, angiogenesis, and stemness of glioblastoma cells. *J Neurosurg*
369 124:129-136.
370 Keniry A, Oxley D, Monnier P, Kyba M, Dandolo L, Smits G, and Reik W. 2012. The H19 lincRNA is a
371 developmental reservoir of miR-675 that suppresses growth and Igf1r. *Nat Cell Biol* 14:659-665.
372 Larue L, and Bellacosa A. 2005. Epithelial-mesenchymal transition in development and cancer: role of
373 phosphatidylinositol 3' kinase/AKT pathways. *Oncogene* 24:7443-7454.
374 Lee YJ, and Han HJ. 2010. Troglitazone ameliorates high glucose-induced EMT and dysfunction of SGLTs through
375 PI3K/Akt, GSK-3beta, Snail1, and beta-catenin in renal proximal tubule cells. *Am J Physiol Renal Physiol*
376 298:F1263-1275.
377 Luo M, Li Z, Wang W, Zeng Y, Liu Z, and Qiu J. 2013. Long non-coding RNA H19 increases bladder cancer
378 metastasis by associating with EZH2 and inhibiting E-cadherin expression. *Cancer Lett* 333:213-221.
379 Maseki S, Ijichi K, Tanaka H, Fujii M, Hasegawa Y, Ogawa T, Murakami S, Kondo E, and Nakanishi H. 2012.
380 Acquisition of EMT phenotype in the gefitinib-resistant cells of a head and neck squamous cell
381 carcinoma cell line through Akt/GSK-3beta/snail signalling pathway. *Br J Cancer* 106:1196-1204.
382 Matouk I, Raveh E, Ohana P, Lail RA, Gershtain E, Gilon M, De Groot N, Czerniak A, and Hochberg A. 2013. The
383 increasing complexity of the oncofetal h19 gene locus: functional dissection and therapeutic
384 intervention. *Int J Mol Sci* 14:4298-4316.
385 Matouk IJ, Raveh E, Abu-lail R, Mezan S, Gilon M, Gershtain E, Birman T, Gallula J, Schneider T, Barkali M, Richler
386 C, Fellig Y, Sorin V, Hubert A, Hochberg A, and Czerniak A. 2014. Oncofetal H19 RNA promotes tumor
387 metastasis. *Biochim Biophys Acta* 1843:1414-1426.
388 Moustakas A, and Heldin CH. 2016. Mechanisms of TGFbeta-Induced Epithelial-Mesenchymal Transition. *J Clin*

PeerJ Preprints | https://doi.org/10.7287/peerj.preprints.3089v1 | CC BY 4.0 Open Access | rec: 17 Jul 2017, publ: 17 Jul 2017

389 *Med* 5.
390 Oviedo-Boyso J, Valdez-Alarcon JJ, Cajero-Juarez M, Ochoa-Zarzosa A, Lopez-Meza JE, Bravo-Patino A, and
391 Baizabal-Aguirre VM. 2007. Innate immune response of bovine mammary gland to pathogenic bacteria
392 responsible for mastitis. *J Infect* 54:399-409.
393 Risolino M, Mandia N, Iavarone F, Dardaei L, Longobardi E, Fernandez S, Talotta F, Bianchi F, Pisati F, Spaggiari L,
394 Harter PN, Mittelbronn M, Schulte D, Incoronato M, Di Fiore PP, Blasi F, and Verde P. 2014.
395 Transcription factor PREP1 induces EMT and metastasis by controlling the TGF-beta-SMAD3 pathway in
396 non-small cell lung adenocarcinoma. *Proc Natl Acad Sci U S A* 111:E3775-3784.
397 Salgado RM, Cruz-Castaneda O, Elizondo-Vazquez F, Pat L, De la Garza A, Cano-Colin S, Baena-Ocampo L, and
398 Krotzsch E. 2017. Maltodextrin/ascorbic acid stimulates wound closure by increasing collagen turnover
399 and TGF-beta1 expression in vitro and changing the stage of inflammation from chronic to acute in vivo.
400 *J Tissue Viability* 26:131-137.
401 Song H, Sun W, Ye G, Ding X, Liu Z, Zhang S, Xia T, Xiao B, Xi Y, and Guo J. 2013. Long non-coding RNA expression
402 profile in human gastric cancer and its clinical significances. *J Transl Med* 11:225.
403 Song Y, Liu C, Liu X, Trottier J, Beaudoin M, Zhang L, Pope C, Peng G, Barbier O, Zhong X, Li L, and Wang L. 2017.
404 H19 promotes cholestatic liver fibrosis by preventing ZEB1-mediated inhibition of EpCAM. *Hepatology*.
405 Steck E, Boeuf S, Gabler J, Werth N, Schnatzer P, Diederichs S, and Richter W. 2012. Regulation of H19 and its
406 encoded microRNA-675 in osteoarthritis and under anabolic and catabolic in vitro conditions. *J Mol*
407 *Med (Berl)* 90:1185-1195.
408 Tang Y, He R, An J, Deng P, Huang L, and Yang W. 2016. The effect of H19-miR-29b interaction on
409 bleomycin-induced mouse model of idiopathic pulmonary fibrosis. *Biochem Biophys Res Commun*
410 479:417-423.
411 Thiery JP. 2002. Epithelial-mesenchymal transitions in tumour progression. *Nat Rev Cancer* 2:442-454.
412 Willis BC, and Borok Z. 2007. TGF-beta-induced EMT: mechanisms and implications for fibrotic lung disease. *Am*
413 *J Physiol Lung Cell Mol Physiol* 293:L525-534.
414 Xie H, Xue JD, Chao F, Jin YF, and Fu Q. 2016. Long non-coding RNA-H19 antagonism protects against renal
415 fibrosis. *Oncotarget* 7:51473-51481.
416 Yang F, Bi J, Xue X, Zheng L, Zhi K, Hua J, and Fang G. 2012. Up-regulated long non-coding RNA H19 contributes
417 to proliferation of gastric cancer cells. *Febs j* 279:3159-3165.
418 Yoshimura A, Wakabayashi Y, and Mori T. 2010. Cellular and molecular basis for the regulation of inflammation
419 by TGF-beta. *J Biochem* 147:781-792.
420 Zhang W, Li X, Xu T, Ma M, Zhang Y, and Gao MQ. 2016. Inflammatory responses of stromal fibroblasts to
421 inflammatory epithelial cells are involved in the pathogenesis of bovine mastitis. *Exp Cell Res*
422 349:45-52.
423 Zhao X, and Lacasse P. 2008. Mammary tissue damage during bovine mastitis: causes and control. *J Anim Sci*
424 86:57-65.
425 Zou XZ, Liu T, Gong ZC, Hu CP, and Zhang Z. 2017. MicroRNAs-mediated epithelial-mesenchymal transition in
426 fibrotic diseases. *Eur J Pharmacol* 796:190-206.
427
428
429
430
431
432

PeerJ Preprints | https://doi.org/10.7287/peerj.preprints.3089v1 | CC BY 4.0 Open Access | rec: 17 Jul 2017, publ: 17 Jul 2017

433 **FIGURE LEGENDS**

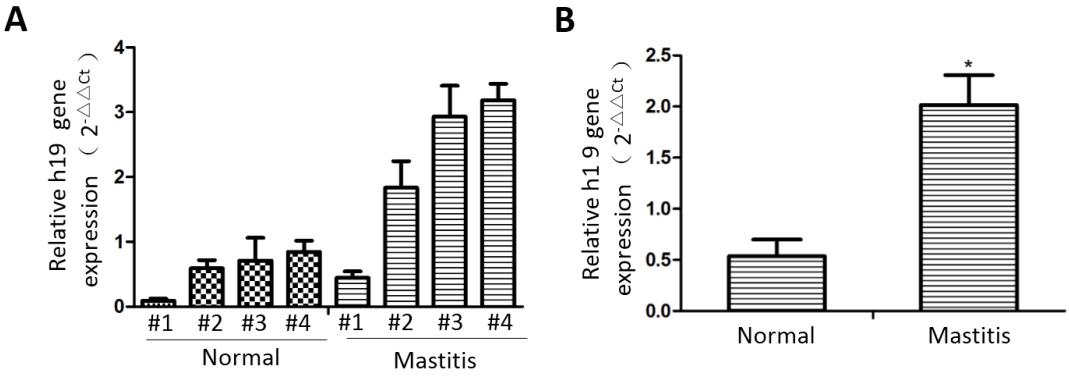

434

435 **Figure. 1 The expression of H19 in normal and mastitic tissue of bovine mammary**

436 **glands.** (**A**) The expression of H19 in normal (n=4) and mastitic (n=4) tissue of mammary

437 glands assessed by RT-qPCR. GAPDH was used as an internal control. (**B**) Statistic analysis

438 of the expression of H19 between normal and mastitis group. *p<0.01 vs Normal.

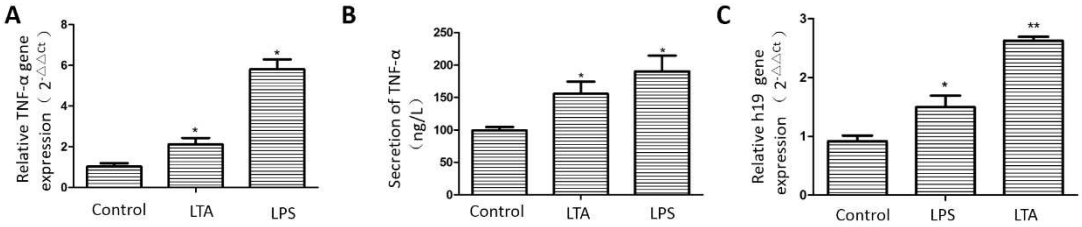

439

440 **Figure. 2 The expression of H19 in MAC-T cells with or without LPS or LTA treatment.**

441 (**A** and **B**) An in vitro inflammatory epithelial cell model induced by LPS or LTA stimulation

442 was established. TNF-α was used as an indicator of MAC-T cell inflammatory responses to

443 stimulus. TNF-α mRNA expression in treated cells was analyzed by RT-qPCR (A), and

444 TNF-α protein secretion in the medium was measured with an ELISA kit (B). (C) The

445 expression of H19 in MAC-T cells analyzed by RT-qPCR. Untreated MAC-T cells were used

446 as control. GAPDH was used as internal control. *p<0.05, **p<0.01 vs Control.

PeerJ Preprints | https://doi.org/10.7287/peerj.preprints.3089v1 | CC BY 4.0 Open Access | rec: 17 Jul 2017, publ: 17 Jul 2017

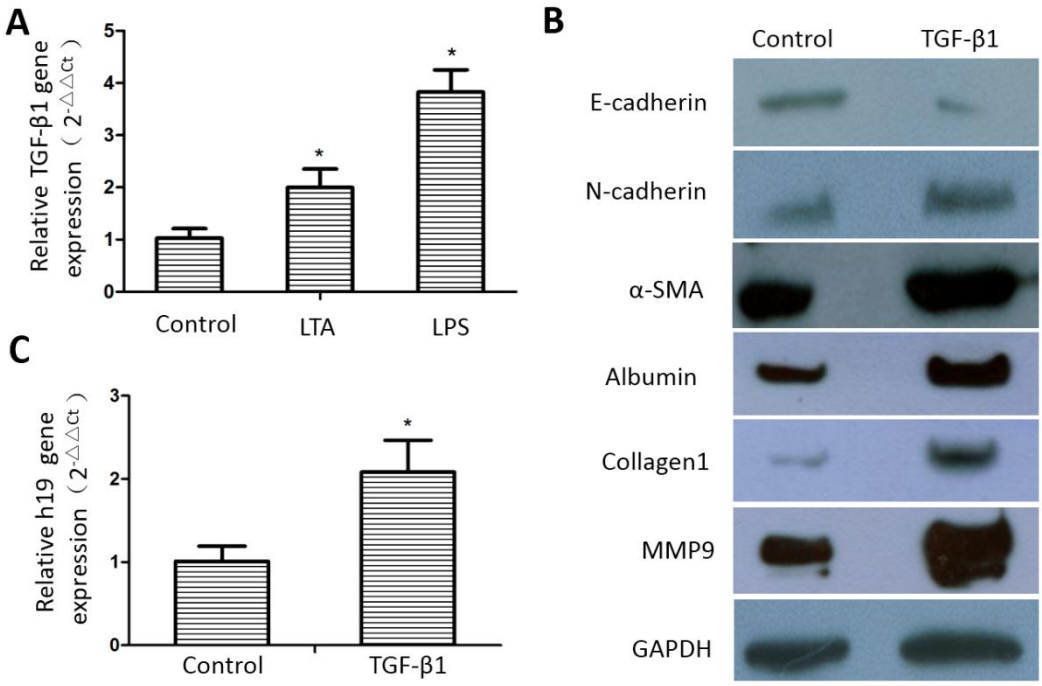

447

448 **Figure. 3 The expression, EMT induction, and promotion of ECM protein expression of**
449 **TGF-β1 in MAC-T cells.** (**A**) The Expression of TGF-β1 in inflammatory MAC-T cells
450 analyzed by RT-qPCR. (**B**)Expression changes of EMT markers (E-cadherin, N-cadherin and
451 α-SMA) and ECM protein (Albumin, MMP9, Collagen type I) in MAC-T cells upon TGF-β1
452 treatments analyzed by western blot. (**C**) The expression of H19 in MAC-T cells upon
453 TGF-β1 treatments analyzed by RT-qPCR. Untreated MAC-T cells were used as control.
454 GAPDH was used as an internal control. *p<0.01 vs control.

PeerJ Preprints | https://doi.org/10.7287/peerj.preprints.3089v1 | CC BY 4.0 Open Access | rec: 17 Jul 2017, publ: 17 Jul 2017

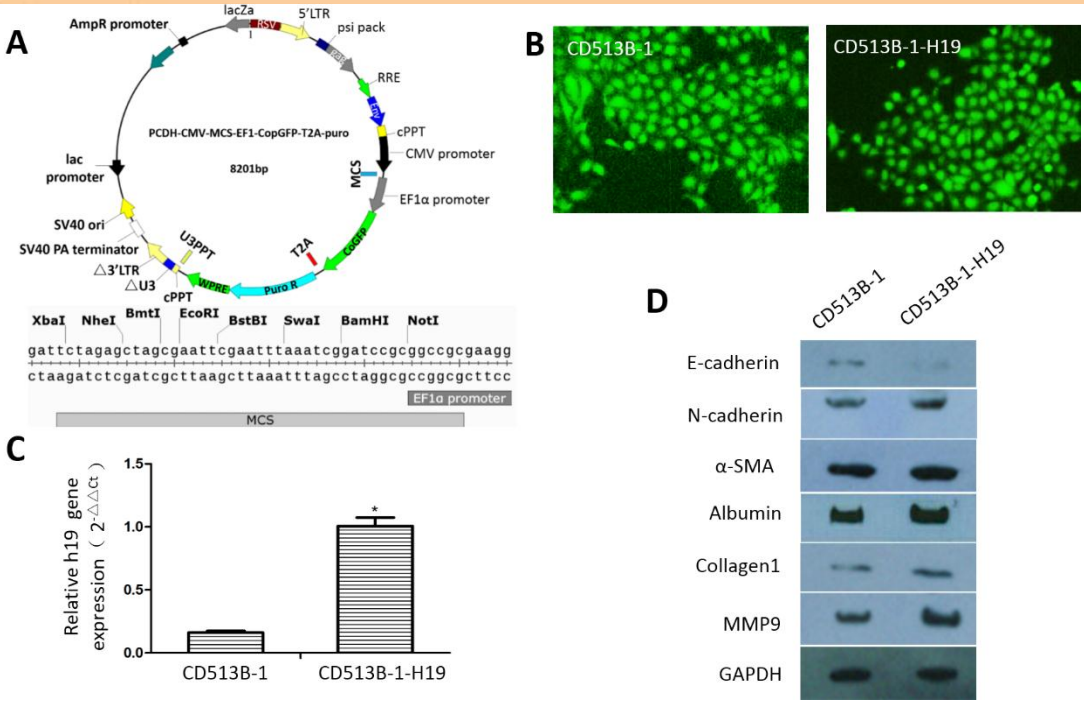

455

456 **Figure. 4 H19 promotes EMT progression and ECM protein expression induced by**
457 **TGF-β1 in MAC-T cells.** (**A**) The information of lentviral vector of CD513B-1. BamHI and
458 NotI sites from the CD513B-1 were chosen to construct the expression plasmid. (**B**)
459 Fluorescence microscopy examination of MAC-T cells transduced withlentviral vectors. GFP
460 expression was observed under fluorescence microscopy. Left, MAC-T cells infected with
461 CD513B-1 as control; right, MAC-T cells infected with CD513B-1-H19. (**C**) Analysis of H19
462 expression in MAC-T cells with empty vector or CD513B-1-H19 by RT-qPCR. (**D**) The
463 expression of EMT marker proteins E-cadherin, N-cadherin, and α-SMA, and ECM proteins
464 Albumin, Collagen 1 and MMP9 were evaluated in H19-overexressing MAC-T cells by
465 western blot. Control vector-transduced cells were used as control. GAPDH was used as an
466 internal control. * $p<0.05$ vs control.

PeerJ Preprints | https://doi.org/10.7287/peerj.preprints.3089v1 | CC BY 4.0 Open Access | rec: 17 Jul 2017, publ: 17 Jul 2017

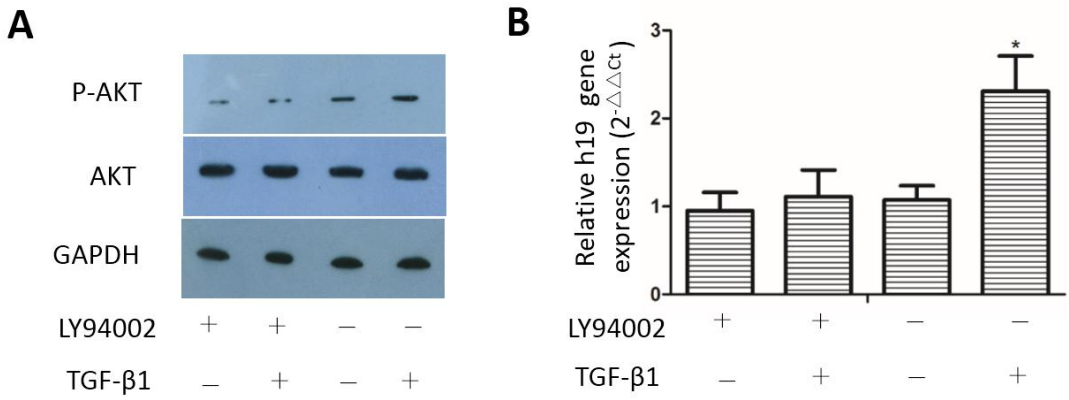

467

468 **Figure. 5 Inhibition of the PI3K/AKT pathway suppressed the activition of**
469 **TGF-β1-induced upregulation of H19 expression.** Confluent MAC-T cells were
470 serum-starved for 24 h and pretreated with the inhibitor at 20 μmol/l in serum-free media for
471 30 min, then the cells were treated with TGF-β1 at 2 ng/ml for 36 h. (**A**) Phosphorylated Akt
472 and total Akt expressions in cells were analyzed by Western blot. (**B**) The expression of H19
473 in cells was analyzed by RT-qPCR. GAPDH was used as an internal control. * p <0.05 vs
474 control.

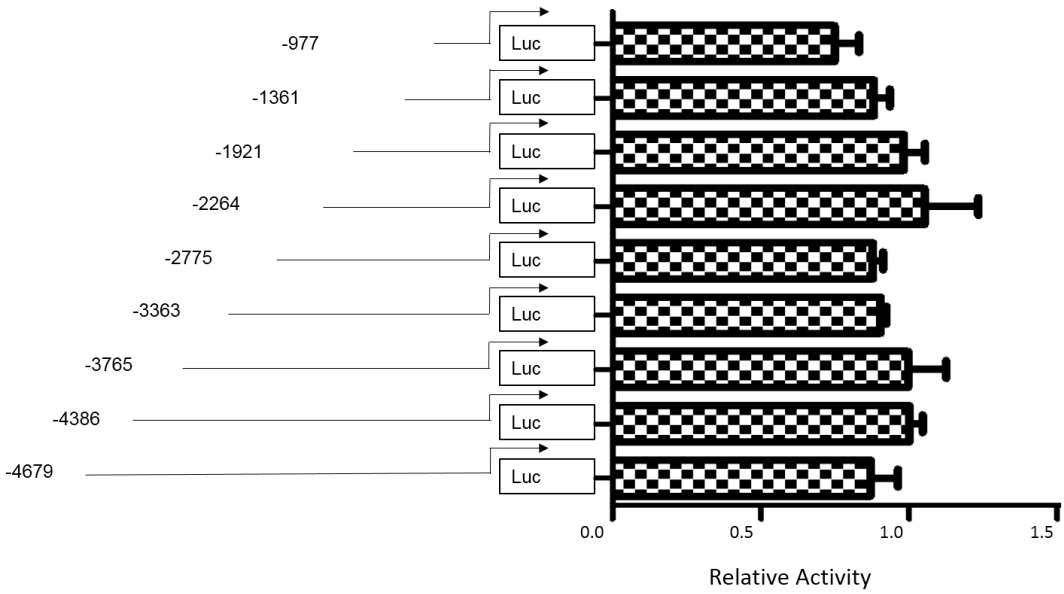

475

476 **Figure. 6 Functional analysis of different lengths of putative promoter sequences of H19**
477 **in MAC-T cells.** The different 5' truncated fragments of upstream of H19 gene sequences

PeerJ Preprints | https://doi.org/10.7287/peerj.preprints.3089v1 | CC BY 4.0 Open Access | rec: 17 Jul 2017, publ: 17 Jul 2017

were generated and inserted into the Luc-vector. The length of fragments was indicated relative to the transcription start site, and the activity of the fragments constructs relative to a promoter-less construct was given. $p>0.05$ among all groups.

PeerJ Preprints | https://doi.org/10.7287/peerj.preprints.3089v1 | CC BY 4.0 Open Access | rec: 17 Jul 2017, publ: 17 Jul 2017